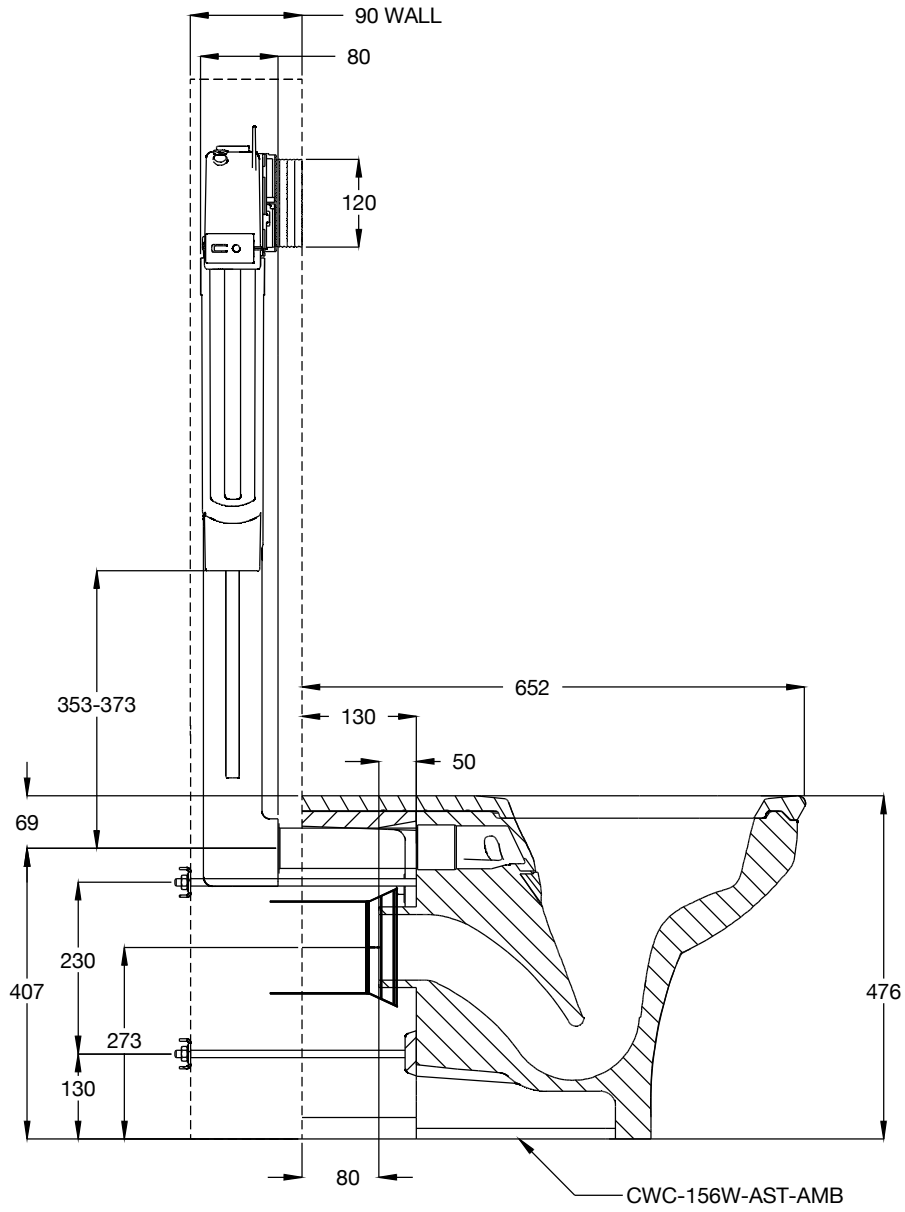

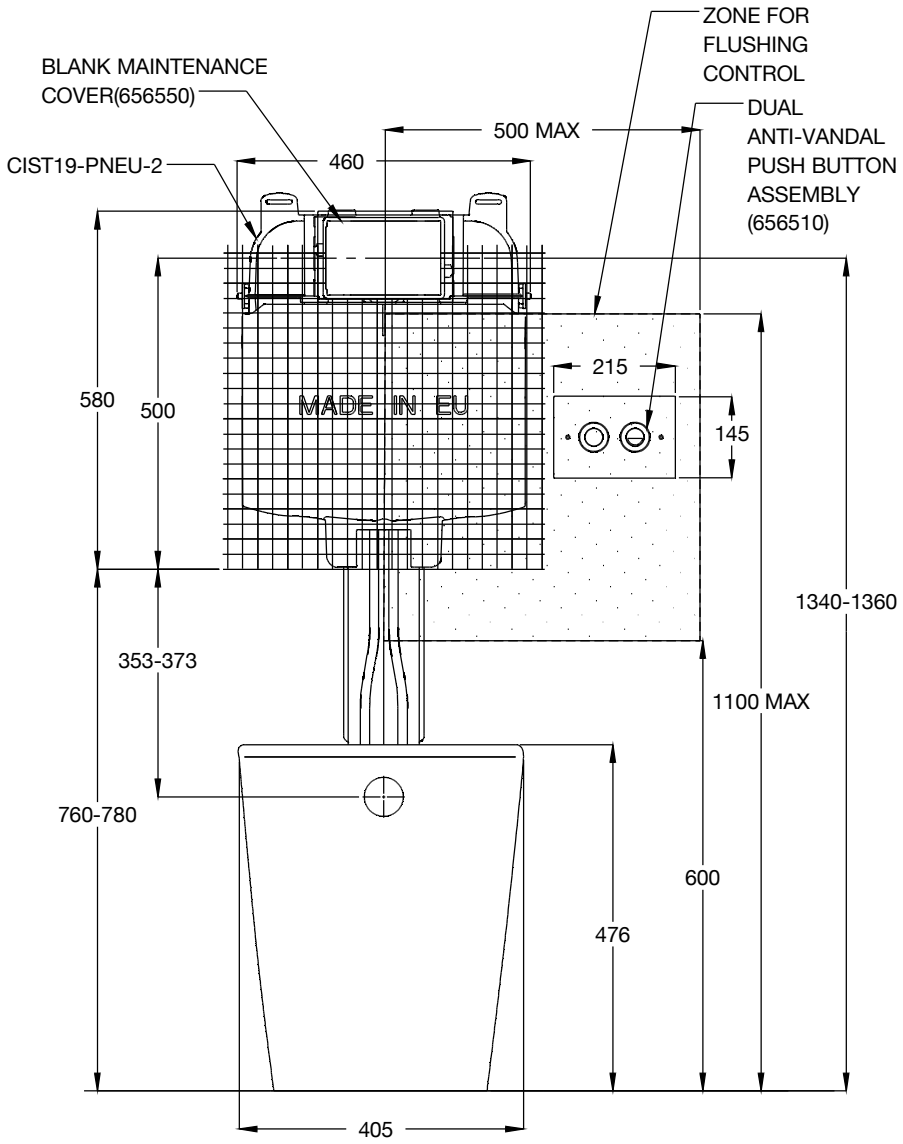

NOTES:

1) PAN ADAPTOR PROVIDED WITH PAN.
2) REFER TO PAN & CISTERN INSTALLATION MANUAL FOR CORRECT FIXINGS & INSTALLATION.
3) DRAWINGS USED AS A GUIDE ONLY & SUBJECT TO CHANGE.
4) THIS CISTERN REQUIRES A GPO & ELECTRONIC COMPONENTS TO BE INSTALLED IN A ACCESSIBLE LOCATION FOR MAINTENANCE.

REV	DESCRIPTION	DATE	APPD
A			

MATERIAL: #

WEIGHT:

REVISION: A

FINISH

UNLESS OTHERWISE STATED ALL DIMENSIONS IN MM TOLERANCES

X ±1.0
X ±0.1
XX ±0.05

IF IN DOUBT ASK

DRN SG 12/13/2019

CKD

APPD

ISSUED

GalvinEngineering
the mark of reliability
410 VICTORIA RD MALAGA WA ABN 76 008 719 382

TITLE CWC-156-AST-AMB + CIST19-PNEU -2 + 656510 + 656550

MANUFACTURED TO: AS N/A

SCALE NOT TO SCALE

DRAWING NO

SHEET 1 OF 1

© COPYRIGHT RESERVED. THIS DRAWING IS THE PROPERTY OF GALVIN ENGINEERING AND SHALL BE RETURNED ON DEMAND. IT MUST NOT BE REPRODUCED, COPIED OR COMMUNICATED TO ANY OTHER PARTY NOR BE USED FOR ANY PURPOSE OTHER THAN STATED IN THE PARTICULAR ENQUIRY, ORDER OR CONTRACT WITH WHICH IT IS USED.

FORM 07-03-13